KIMESSA
SWISS

Innovative Gas monitoring systems and solutions for

BOILER PLANT ROOMS

Zertifiziertes Managementsystem SQS ISO 9001:2000

Rautistrasse 12 • CH-8047 Zürich • Schweiz
Tel.: +41 (0)44 404 38 38 • Fax: +41 (0)44 404 38 39
info@kimessa.com
www.kimessa.com

Smart gas monitoring systems.

KIMESSA SWISS

KIMESSA AG

KIMESSA AG was established in 1985 as an innovator in the design and manufacture of electronic fixed gas detection solutions.

KIMESSA AG specialises in fixed gas monitoring and control systems, with customers drawn from industries including underground car parks, HVAC, laboratories, refrigeration, food and brewing.

KIMESSA AG has achieved worldwide notable success with their acclaimed carbon monoxide monitoring and control equipment in the underground car park market, designed to compliment specialist ventilation systems with some of the world's leading companies in this field.

All of our products are developed and manufactured in Switzerland. 50% of our output is exported through an experienced distributor network.

Certified to ISO 9001:2000 in 2004 and today to ISO 9001:2008, KIMESSA AG proves they are committed to meeting their customers demand for robust, high quality and innovative products.

KIMESSA-Products

- Swiss quality engineered products
- Free consulting and project design
- Proven competent and co-operative worldwide customer service
- Maintenance provided by dedicated and motivated personnel
- KIMESSA is committed to develop and innovate while maintaining a strict QC protocol combined with rigorous functional tests on each product
- KIMESSA Gas detection solutions represent 30 years experience in the market
- For more information, please consult our website or a distributor near you. **www.kimessa.com**

Zertifiziertes Managementsystem SQS ISO 9001:2000

KIMESSA SWISS

Today's society daily lives and works with poisonous, flammable and inert gases. Gas is an economical, functional and essential commodity, but one which can become dangerous if used or released in a non-controlled manner.

Intensive research and development have led to the production of the compact KIMESSA gas monitoring system for industrial and domestic applications. With the CANline control units, and an extensive variety of Gas Detectors, KIMESSA is helping to prevent accidents and damage to people, homes and the workplace.

A gas monitoring system also actively promotes energy saving by monitoring and controlling the use of gas.

Thanks to the superior technical solutions they offer, KIMESSA gas monitoring systems are versatile, high quality and extremely cost-efficient. All products are subject to stringent quality control and are manufactured using innovative production and testing techniques.

KIMESSA and their representatives have more than 30 years of experience, and extensive technical knowledge to deliver the best in class guarantee when consulting, implementing and supporting your gas monitoring system.

Gas monitoring in:

Underground car parks
Typical gases:
CO, NO2

Refrigeration systems
Typical gases:
NH3, CO2, HFKW/HFCKW

Laboratories
Typical gases:
O2, CO2, H2, CH4, C3H8

Gas heatings
Typical gases:
CH4, C3H8

Industrial applications
Typical gases:
HC, H2S, O2, Cl2, O3, CH4

Also:

- Workplace hygiene
- Chemical industry
- Power stations
- Beverage production
- Refrigeration systems
- Food industry
- Petro chemistry
- Water/Sewage water
- Cellulose/Paper industry

KIMESSA SWISS

Boiler plant rooms

Gas leaks may develop at heating units due to the failure of seals, damaged pipes, accidental impacts, etc. Early detection is critical. The activation of a gas monitoring system can shut off the gas supply via a gas solenoid valve to switch off the burner, alert personnel by local sounders, signal a BMS and or fire panel and log the gas alarm by time and date in the CANline monitor. For reliable monitoring, KIMESSA gas detectors

are designed for zone 1 or zone 2. The BUS mounted CWED 68 programmable sounder beacon with display or the Touch Screen displays can be installed at the entrance to the heating plant room allowing for easy viewing of the ambient gas levels with colour coded bar graphs to facilitate easy viewing of the gas monitoring status. All measurement data and alarm events are recorded.

In non-Ex rated zones, the BUS KSPC 121 pellistor based combustible gas detector suitable for natural gas or LPG, in a robust metallic housing, designed for one-person calibration and features zero and span potentiometers. The BUS KSEC 504 carbon monoxide detector will rapidly detect the presence of toxic CO gas, a by-product of in complete combustion. The KSEC 504 mounts on the same BUS cable as the KSPC 121 combusstible gas detector.

The explosion hazard zone determines the type of detector used: The KSS 113 Ex (semiconductor) or the KSP 121 Ex (pellistor) are used for zone 2. For Zone 1 the explosion-proof gas detector GSPM 121 Ex is used.

Touch screens can be mounted at the entrance to the plant room for visualization and rapid assessment of the system status. All measurement data and events are

recorded and can be reproduced and analysed at all times.

A correctly configured gas monitoring system combined with the high quality of KIMESSA gas measurement and control devices guarantee the sought after level of safety. The technical expertise of KIMESSA and their representatives, as well as years of practical experience provide the user with an optimum solution.

We can also offer unique and optimized products for plant room heating systems, such as the type-tested BUS-Ex Transmitter with an extremely reliable infra-red measuring principle. BUS installation provides cost savings up to 50% against conventional star cabling. Our detector housings are fabricated from welded stainless steel and are extremely robust. We also integrate all signalling devices onto the BUS. For example, the LED alarm signs and sounders can be integrated into the BUS with significant cost savings on cabling.

Gas monitor CANline 04

Supply: 230 VAC (opt. 24 VDC)
Sensor-Inputs: 4 x Analogue / 4 x Digital (CAN-Bus)
Output signal digital: Modbus RTU
Switching output: 5 potential free (2A)

Main features:

Operating temperature:	-10 °C ... +40 °C
Air humidity:	5...95 % (non condensing)

Specifications electronic

Supply:	230 VAC (opt. 24 VDC)
Power consumption:	max. 60 mA

Specifications construction

Housing protection:	IP 54
Material:	Thermoplast
Weight:	1100 gr

Features

- The CANline 04 control unit displays the detector gas concentration with name and location
- The CANline 04 may be connected to a

total of 4 sensors along with 6 of relay cards

- Maximum of 32 relays may be connected
- Several Touch-Displays may be connected
- User-Friendly programming mode by buttons (code protected) or by Configuration-Software (Windows)

Electronic and Dimensions

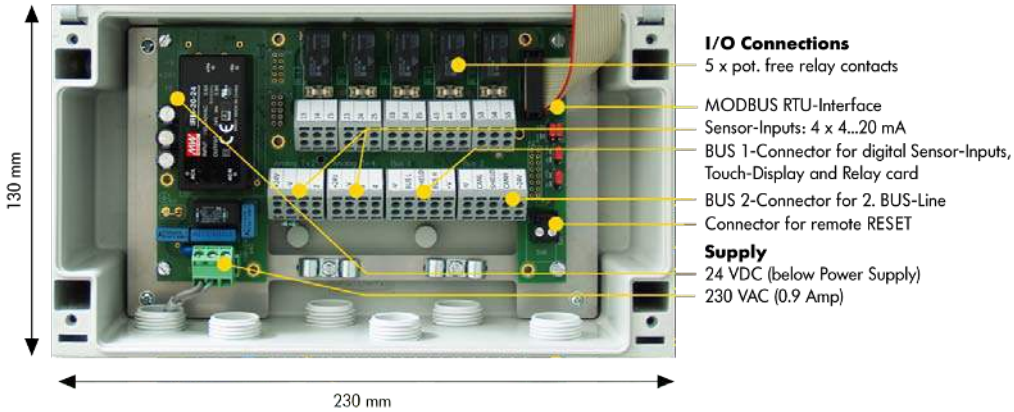

Standalone MONOline 121

for monitoring of CH4

Measurement principle: Pellistor
Output signal analogue: 4...20 mA / 0...20 mA
Output signal digital: KIMESSA CANBUS / Modbus RTU
Position: 30 cm from Floor

Sensor specifications

Standard calibration:	0...100 % LEL
Response time t 90:	< 20 sec
Operating temperature:	-30 °C ... +50 °C
Position sensitivity:	none
Long term output drift:	< 2% signal loss/ month
Life span at 20 °C:	5-8 years, depending on the application

Specifications electronic

Wiring analogue:	3x 0,75 mm2, shielded
Wiring digital:	4x 1,0 mm2, shielded
Supply:	230 VAC/ 24 VDC
Power consumption:	max. 200 mA

Inspection (Maintenance)

The sensor and the electronic require an inspection. Routine calibration is recommended once or twice a year.

Specifications construction

Housing protection:	IP 54
Material:	Thermoplast
Weight:	820 g

Electronic and Dimensions

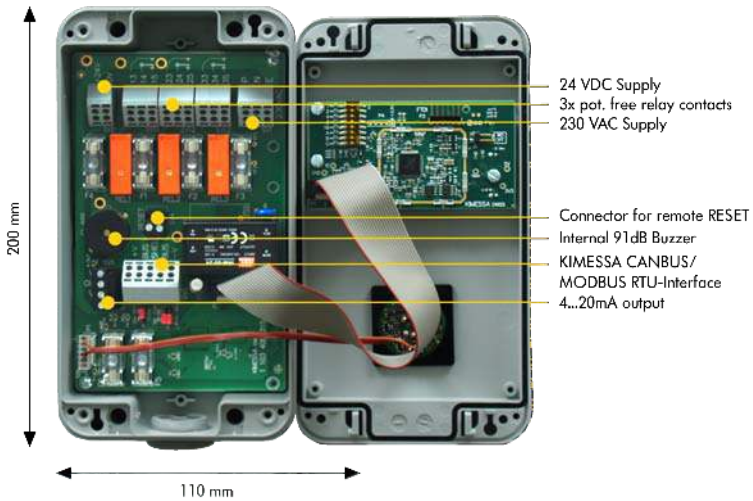

KIMESSA SWISS

Gas sensor KSS 113

for detection of CH4

Measurement principle: Semiconductor
Output signal analogue: 4...20 mA
Position:

Sensor specifications

Standard calibration:	0...100 % LEL
Response time t 90:	< 20 sec
Operating temperature:	-30 °C ... +50 °C
Position sensitivity:	none
Long term output drift:	< 2% signal loss/ month
Life span at 20 °C:	5-8 years, depending on the application

Specifications electronic

Wiring analogue:	3x 0,75 mm2, shielded
Supply:	13.5...30 VDC
Power consumption:	max. 170 mA

Inspection (Maintenance)

The sensor and the electronic require an inspection. Routine calibration is recommended once or twice a year.

Specifications construction

Housing protection:	IP 65
Material:	rust-proof and acid-resistant steel, RAL 5009
Weight:	600 g

Electronic and Dimensions

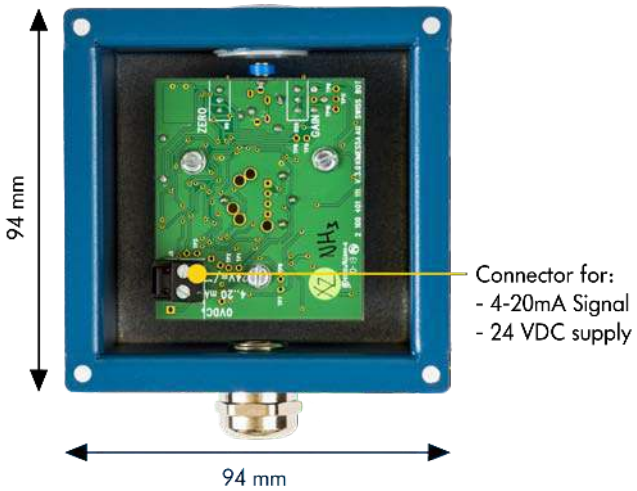

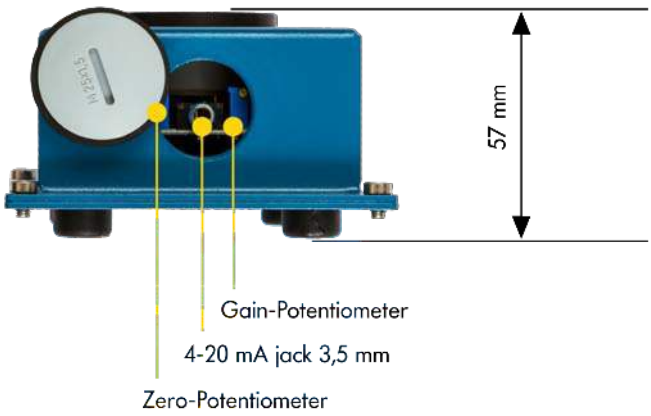

KIMESSA SWISS

Gas sensor KSP 121

for detection of CH4

Measurement principle: Pellistor
Output signal analogue: 4...20 mA
Position: 30 cm from Floor

Sensor specifications

Standard calibration:	0...100 % LEL
Response time t 90:	< 20 sec
Operating temperature:	-30 °C ... +50 °C
Position sensitivity:	none
Long term output drift:	< 2% signal loss/ month
Life span at 20 °C:	5-8 years, depending on the application

Specifications electronic

Wiring analogue:	3x 0,75 mm2, shielded
Supply:	13.5...30 VDC
Power consumption:	max. 170 mA

Inspection (Maintenance)

The sensor and the electronic require an inspection. Routine calibration is recommended once or twice a year.

Specifications construction

Housing protection:	IP 65
Material:	rust-proof and acid-resistant steel, RAL 5009
Weight:	600 g

Electronic and Dimensions

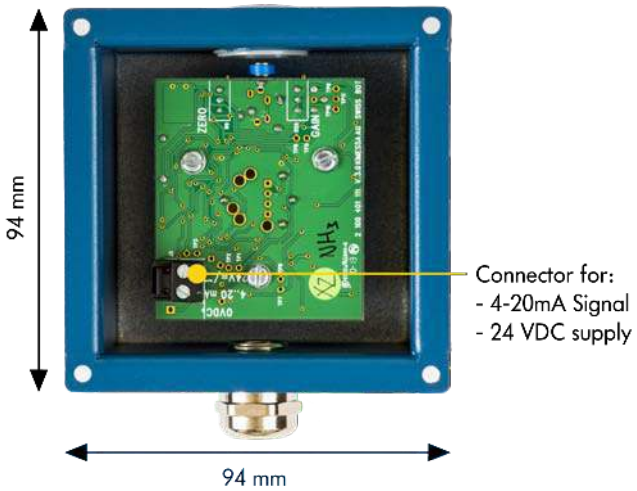

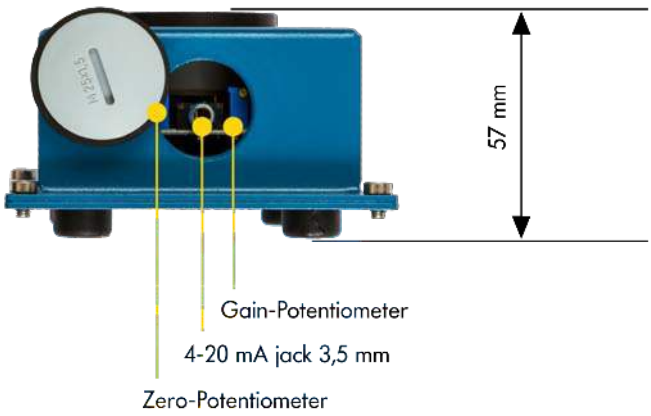

Gas sensor KSIM 1100

for detection of CH4

Measurement principle: Infrared
Output signal analogue: 4...20 mA / 0...20 mA
Output signal digital: KIMESSA CANBUS
Position:

Sensor specifications

Standard calibration:	0...100 % UEG
Response time t 90:	< 90 sec
Operating temperature:	-30 °C ... +50 °C
Position sensitivity:	none
Long term output drift:	< 2% signal loss/ month
Life span at 20 °C:	6-8 years, depending on the application

Specifications electronic

Wiring analogue:	3x 0,75 mm2, shielded
Wiring digital:	4x 1,0 mm2, shielded
Supply:	16.5...30 VDC
Power consumption:	max. 80 mA

Inspection (Maintenance)

The sensor and the electronic require an inspection. Routine calibration is recommended once or twice a year.

Specifications construction

Housing protection:	IP 65
Material:	rust-proof and acid-resistant steel, RAL 5009
Weight:	550 g

Electronic and Dimensions

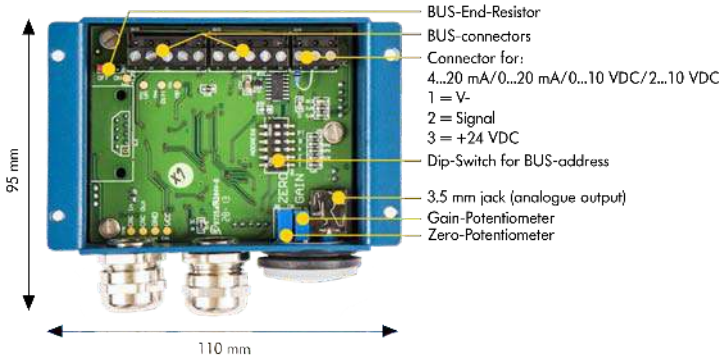

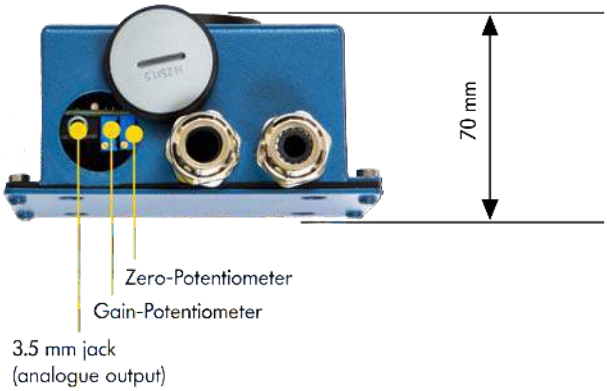

Gas sensor GSPM 121 Ex

for detection of CH4

Measurement principle: Pellistor
Output signal analogue: 4...20 mA
Output signal digital: KIMESSA CANBUS / Modbus RTU
Ex-Zone: 1 (2G)
Position: 30 cm from Floor

Sensor specifications

Standard calibration:	0...100 % LEL
Response time t 90:	< 20 sec
Operating temperature:	-30 °C ... +50 °C
Position sensitivity:	none
Long term output drift:	< 2% signal loss/ month
Life span at 20 °C:	5-8 years, depending on the application

Specifications electronic

Wiring analogue:	3x 0,75 mm2, shielded
Wiring digital:	4x 1,0 mm2, shielded
Supply:	16.5...30 VDC
Power consumption:	max. 200 mA

Inspection (Maintenance)

The sensor and the electronic require an inspection. Routine calibration is recommended once or twice a year.

Specifications construction

Housing protection:	IP 65
Material:	Aluminum, RAL 5009 (stainless steel as an option)
Weight:	1200 g
Tests:	CE / II 2G Ex d ia IIC T4 Gb / BVS 15 ATEX E 065 X

Electronic and Dimensions

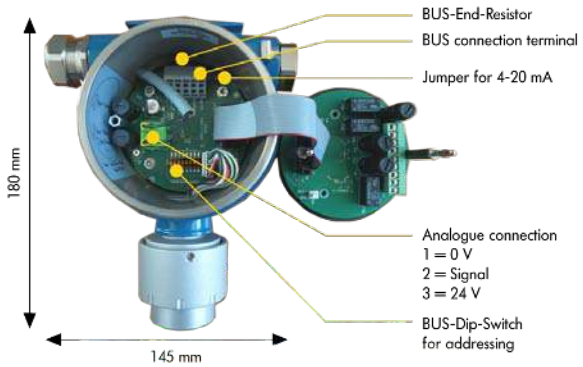

KIMESSA SWISS

Gas sensor GSIM 1100 EX

for detection of CH4

Measurement principle: Infrared
Output signal analogue: 4...20 mA
Output signal digital: KIMESSA CANBUS / Modbus RTU
Ex-Zone: 1 (2G)
Position:

Sensor specifications

Standard calibration:	0...100 % UEG
Response time t 90:	< 90 sec
Operating temperature:	-30 °C ... +50 °C
Position sensitivity:	none
Long term output drift:	< 2% signal loss/ month
Life span at 20 °C:	6-8 years, depending on the application

Specifications electronic

Wiring analogue:	3x 0,75 mm2, shielded
Wiring digital:	4x 1,0 mm2, shielded
Supply:	16.5...30 VDC
Power consumption:	max. 200 mA

Inspection (Maintenance)

The sensor and the electronic require an inspection. Routine calibration is recommended once or twice a year.

Specifications construction

Housing protection:	IP 65
Material:	Aluminum, RAL 5009 (stainless steel as an option)
Weight:	1200 g
Tests:	CE / II 2G Ex d ia IIC T4 Gb / BVS 15 ATEX E 065 X

Electronic and Dimensions

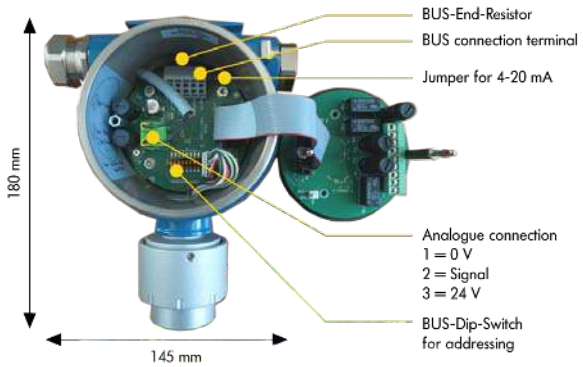

KIMESSA SWISS

Flash light PS 651, 230 V

Supply: 230 VAC

Main features:

Operating temperature:	-20 °C...+70 °C

Specifications electronic

Wiring analogue:	3x1.5mm PNE
Supply:	230 VAC
Power consumption:	40mA
Flash frequency:	1W – ca. 1 Hz
Volume:	none

Specifications construction

Housing protection:	IP 54
Material:	Impact resistant ABS plastic housing,
Weight:	265 gr

Features

- Impact resistant ABS plastic housing, colour light grey
- Lamp cap made of polycarbonate, available in orange (standard), blue, red and green
- Xenon flash tube with 5 joules
- Flash Freuquency 5 Ws–approx.1Hz
- Interior installation (option also outdoors)
- Life service approx. 2,000 hours of operation
- Temperature range: -20...+70 °C

Electronic and Dimensions

KIMESSA SWISS

Flash light with horn KDF, 230 V

Supply: 230 VAC

Main features:

Operating temperature:	-20 °C bis +50 °C

Specifications electronic

Wiring analogue:	3x.1.5mm PNE
Supply:	230 VAC
Power consumption:	25 mA
Flash frequency:	1.4 Hz
Volume:	88 - 92 dB

Specifications construction

Housing protection:	IP 43 NEMA type 2
Material:	ABS, grau RAL 7035
Weight:	270 gr

Features

- Signal light Ø 60 mm
- Sound and light seperate selectable

Electronic and Dimensions

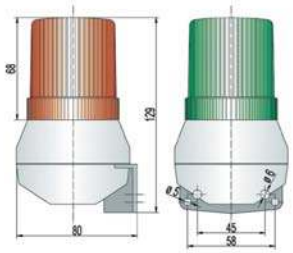

CANline CWS-Webserver "Easylog"

Supply: 9...26 VDC
Sensor-Inputs: none
Switching output: none

Main features:

Operating temperature:	0...55 °C
Air humidity:	5...95 % (non-condensing)

Specifications electronic

Wiring digital:	3x0.75 mm2 (Modbus RTU)
Supply:	9...26 VDC
Power consumption:	30 mA

Specifications construction

Housing protection:	IP 20
Material:	plastic enclosure
Weight:	50 g

Features

- The CANline Webserver CWS 101serves as a graphic display measuring physical interface
- The presentation of the operating conditions are displayed using coloured bar graphs (green=Normal mode, orange=Pre-alarm, red=Main-alarm, grey=Inactive sensor, yellow and "Error" = Technical Error
- Measured gas values are automatically logged and can be easily recalled by generating a PDF-File from the Web browser
- Automatic logging of gas alarm events: Pre-alarm, Main-alarm and faults
- Sending E-Mails in case of gas alarm

Electronic and Dimensions

CANline Touch-Display

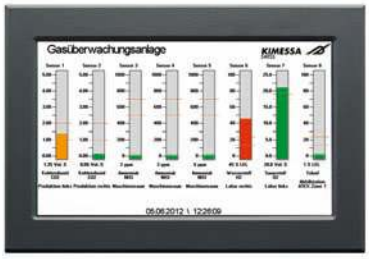

Supply: 16...30 VDC
Sensor-Inputs: none
Output signal digital: KIMESSA CANBUS
Switching output: none

Main features:

Operating temperature:	-20 °C ... +70 °C
Air humidity:	5...95 % (non condensing)

Specifications electronic

Wiring digital:	4x1.00 mm2, shielded
Supply:	16...30 VDC
Power consumption:	300 mA

Specifications construction

Housing protection:	IP 20
Material:	Thermoplast
Weight:	950 g

Features

- The CANline Touch-display serves as a graphic display measuring physical interface
- The presentation of the operating conditions are displayed using coloured bar graphs (green=Normal mode, orange=Pre-alarm, red=Main-alarm, grey=Inactive sensor, yellow and "Error" = Technical Error
- Lock Alarm Display: Display will lock in 'Gas-Alarm' to view the peak gas reading (touch the screen RESET- Button to revert to normal viewing)
- Upload an area floor plan to display sensor location and status (changing colour from e.g. green to red)
- Measured gas values are automatically logged and can be easily recalled by touching the sensor chart block

Electronic and Dimensions

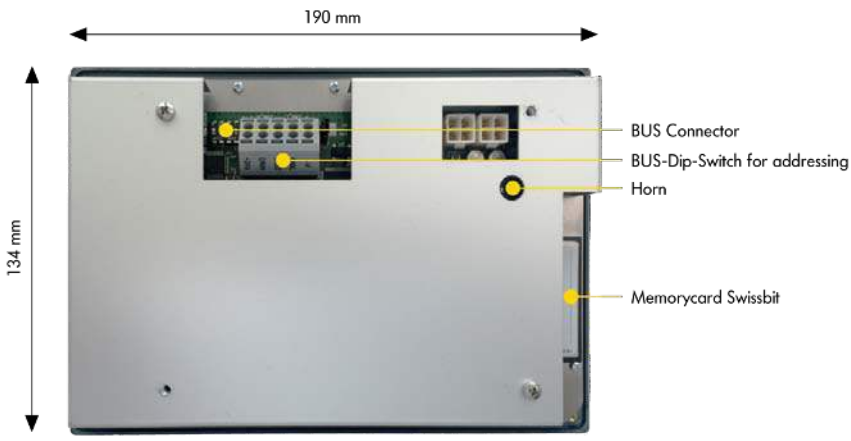

KIMESSA SWISS

Kimessa BUS System
without bus compatible alarming units

Signal:
KIMESSA CANBUS

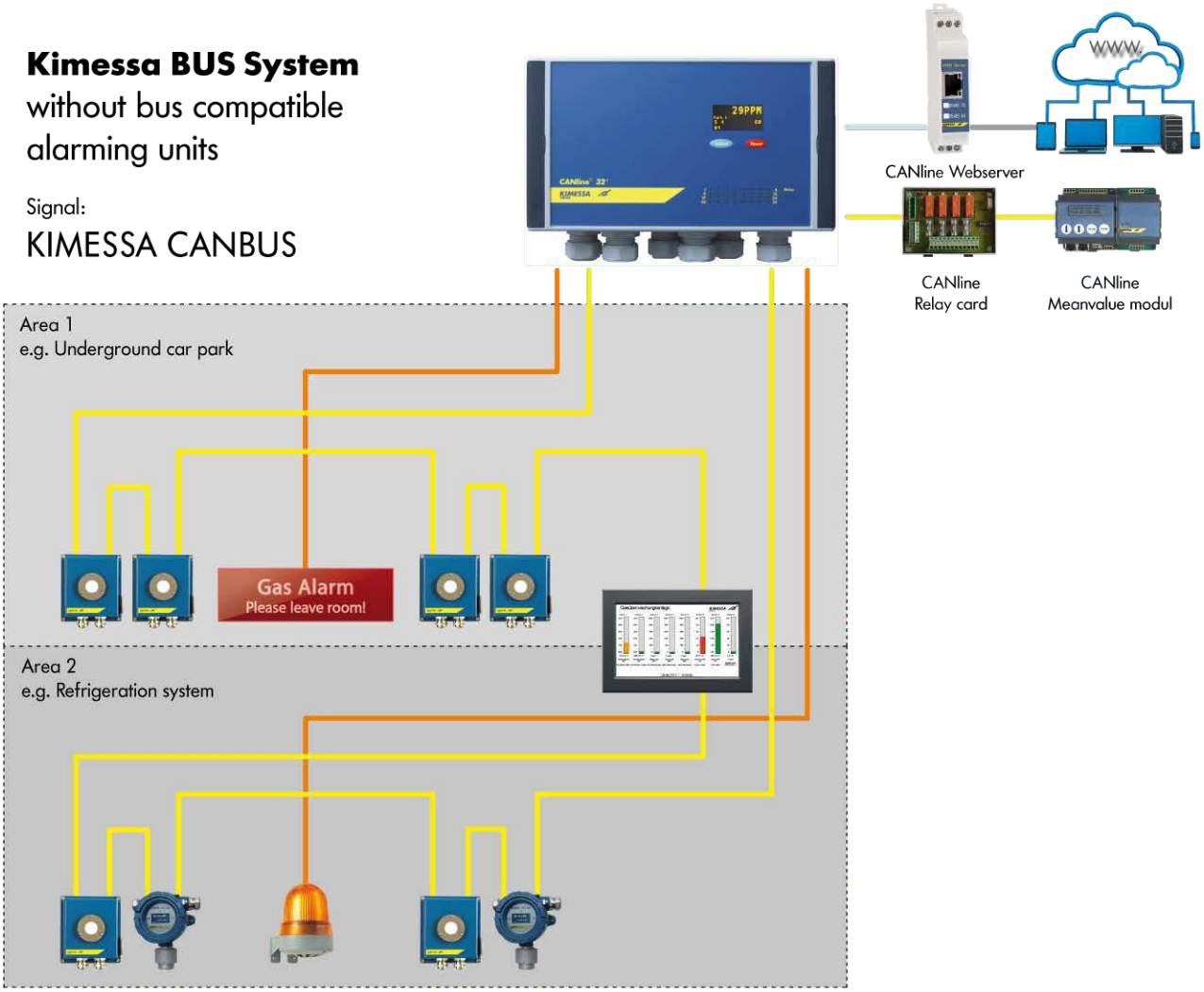

Alarm component-Wiring:
24 VDC or 230 VAC

KIMESSA CANBUS-Cable Li HCH:
Cable 4x 1 mm², shielded, colored, max. 1200 m

Modbus-RTU-Wiring:
Cable 3x 0.75 mm², shielded, max. 1000 m

Network connection:
8-pin RJ45, 10/100 Mbps, Auto MDI/MDIX, Auto-Negation

KIMESSA SWISS

Kimessa BUS System
with bus compatible
alarming units

Signal:
KIMESSA CANBUS

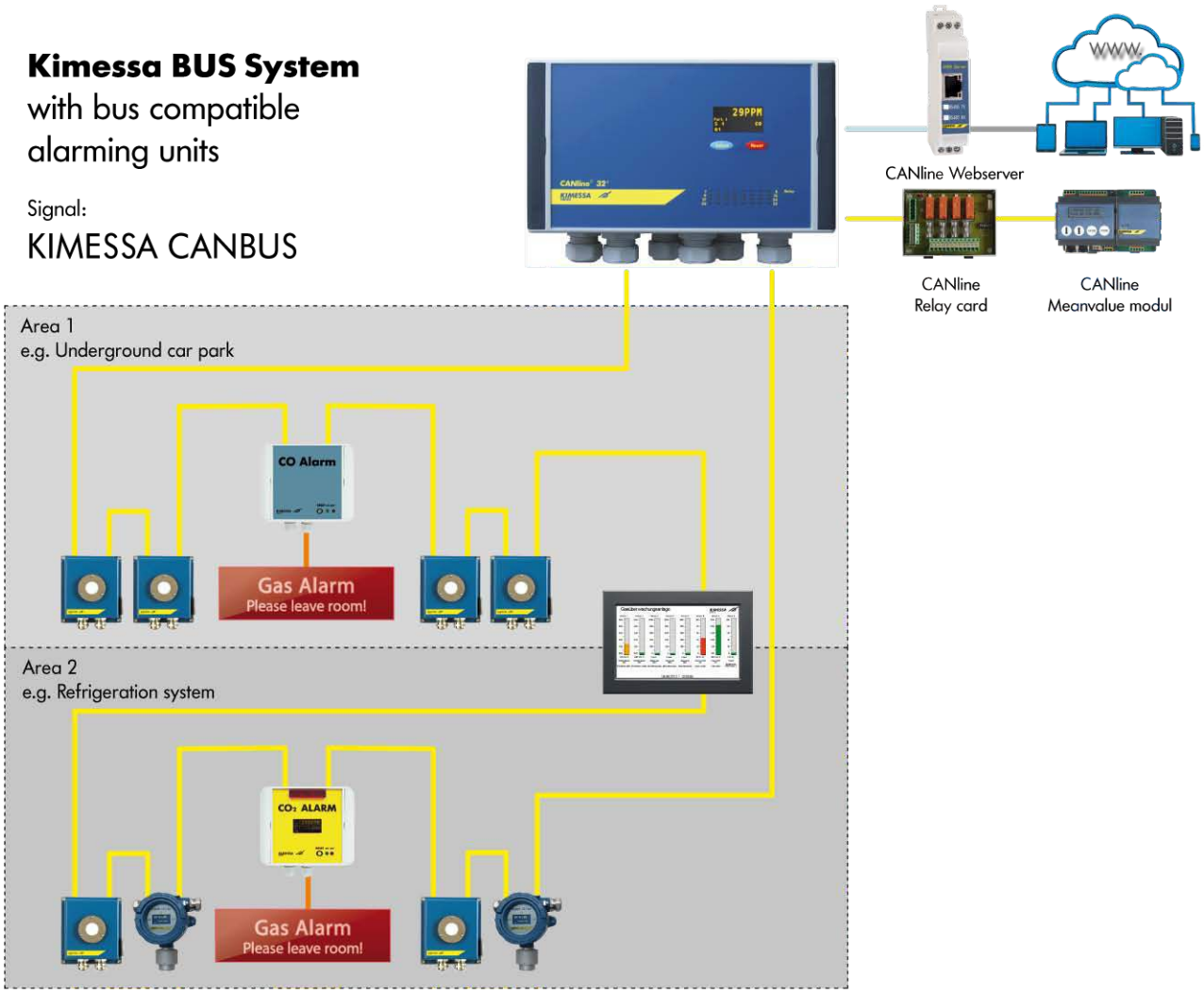

Alarm component-Wiring:
24 VDC or 230 VAC

KIMESSA CANBUS-Cable Li HCH:
Cable 4x 1 mm², shielded, colored, max. 1200 m

Modbus-RTU-Wiring:
Cable 3x 0.75 mm², shielded, max. 1000 m

Network connection:
8-pin RJ45, 10/100 Mbps, Auto MDI/MDIX, Auto-Negation

KIMESSA SWISS

Management certificates

Certificate

SQS herewith certifies that the company named below has a management system which meets the requirements of the standard specified below.

Kimessa AG
8047 Zürich
Switzerland

Certified area

Whole Company

Field of activity

Gas monitoring systems

Standard

ISO 9001:2008 Quality Management System

Swiss Association for Quality and Management Systems SQS
Bernstrasse 103, CH-3052 Zollikofen
Issue date: September 23, 2013

This SQS Certificate is valid up to and including September 22, 2016
Scope numbers 18, 19
Registration number 30061

X. Edelmann, President SQS

R. Glauser, CEO SQS

Trusted Cert

SCESm 001

Swiss Made

Partner of IQNet

KIMESSA SWISS

QS QUALITY SERVICE

MITTEILUNG

(1) über die Anerkennung der Qualitätssicherung Produktion

(2) Geräte und Schutzsysteme zur bestimmungsgemässen Verwendung in explosionsgeschützten Bereichen – **Richtlinie 94/9/EG**

(3) Mitteilungsnummer:

QS 15 ATEX 2123

(4) Gerät(e): Herstellung und Vertrieb von Gasmessfühlern Typ GS.M ... Ex in der Zündschutzart druckfeste Kapselung „d"

(5) Die benannte Stelle führt eine Liste der EG-Baumusterprüfbescheinigungen, für die diese Mitteilung gilt.

(6) Antragsteller: Kimessa AG
Rautistrasse 12
8047 Zürich

(7) Hersteller: Kimessa AG
Rautistrasse 12
8047 Zürich

(8) Die **QS Zürich AG**, benannte Stelle Nr. 1254 für Anhang IV, nach Artikel 9 der Richtlinie des Rates der Europäischen Gemeinschaften vom 23. März 1994 (94/9/EG), teilt dem Antragsteller mit, dass er ein Qualitätssicherungssystem unterhält, welches den Anforderungen gemäss Anhang IV, Qualitätssicherung Produktion, der Richtlinie genügt.

(9) Diese Mitteilung basiert auf dem vertraulichen Auditbericht V-14.1620, ausgestellt am 23. Juli 2015. Die Mitteilung ist gültig bis zum 21. Juli 2018 und kann zurückgezogen werden, wenn der Hersteller die Anforderungen des Anhang IV nicht mehr erfüllt.

Die Ergebnisse der regelmässigen Begutachtung des Qualitätssicherungssystems sind Bestandteil dieser Mitteilung.

(10) Gemäss Artikel 10 (1) der Richtlinie 94/9/EG ist hinter der CE-Kennzeichnung die Kenn-Nummer 1254 von **QS Zürich AG,** der benannten Stelle des Herstellers anzugeben, die in der Produktionsüberwachungsphase tätig wird.

QS Zürich AG Zürich, 27. Juli 2015

Für die Geschäftsleitung
Lukas Beljean

NOTIFIED BODY QS QUALITY SERVICE CE-1254 QUALITY SERVICE SWITZERLAND

Diese Bescheinigung darf nur vollständig, ohne Änderungen vervielfältigt werden.
Bescheinigungen ohne Stempel und Unterschrift haben keine Gültigkeit.

QS Zürich AG, Postfach 6335, 8050 Zürich