ECO$_2$Watt

Great cooling capacity CO_2 condensing units

- Large maintenance access.
- No engine room.
- Custom design.

ECO$_2$Watt are great cooling capacity CO_2 condensing units, single or double suction transcritical cycle with built-in gas cooler, or in cascade cycle, designed according to the needs of the installation for a total cooling capacity between 80 and 300 kW.

Features

- Construction in galvanised sheet steel structure with epoxy paint.
- Sets of 2 or 3 CO_2 compressors equipped with rotalock valves.
- Inverter capacity control per compressor group.
- Particulate separator and CO_2 filter.
- Oil separator and accumulator with oil filter and electronic compressor injection.
- Medium pressure CO_2 receiver (PS: 60 bar) with double safety valve.
- Economiser - liquid CO_2 subcooler.
- Refrigeration circuit made of copper tube.
- Instrumentation panel with pressure gauges and load taps.
- Integrated control and power panel with electronic control unit for compressor and electronic valve management.

Transcritical ECO$_2$Watt

- Set of 2 or 3 transcritical CO_2 compressors and set of compressors in parallel. Inverter drive in one compressor of each set.
- Cooler gas pressure regulating valves.
- Vessel pressure regulating valves.
- Internal economiser exchanger.
- Gas cooler with copper tube coils and aluminium fins in parallel.
- PS: 120 bar. Variable speed EC axial motor fans.

Cascade ECO$_2$Watt

- Double cascade plate heat exchanger with gravity circulation.
- High temperature refrigerant R-290 or HFC.
- Semihermetic high temperature compressors, with Inverter drive in one compressor.
- High temperature circuit made of copper, with filter, sight glass and electronic expansion valves.
- Copper tube and aluminium finned coil condenser in parallel V configuration.
- Variable speed EC axial motor fans.

Transcritical cycle with parallel compression

The transcritical cycle with parallel compression improves energy efficiency at high ambient temperatures.

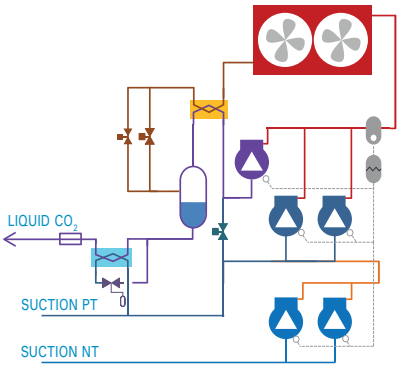

Cascade cycle

The CO_2 cascade cycle with a high temperature cycle of R-290 or HFC offers excellent refrigeration performance in low temperature applications (cold rooms or freezer tunnels).

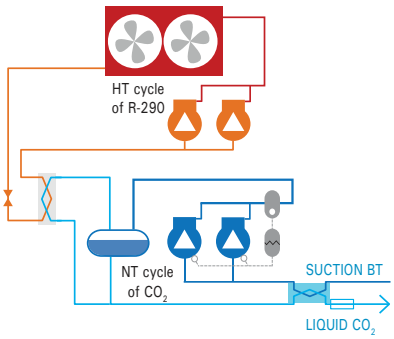

ECO_2Watt dimensions

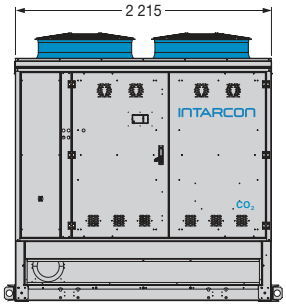

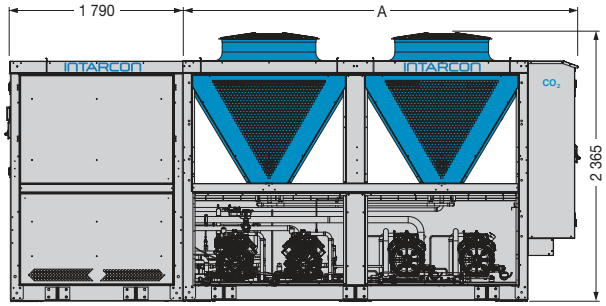

Dimensions (mm)	A
1 series	1 843
2 series	3 319
3 series	4 796
4 series	6 269
5 series	7 742